Notes:

1. Maximum Electric Current: 18A
2. Maximum Electric Rating: Up to 2000V
3. Terminal Material: Copper
4. Wire Range: 18 AWG (1.00mm^2)

Standard (Metric)

L1: 0.47 (12.0mm)
D: 0.07 (1.7mm)
D1: 0.06 (1.4mm)
D2: 0.08 (2.2mm)

Tolerances

(Unless Otherwise Specified)

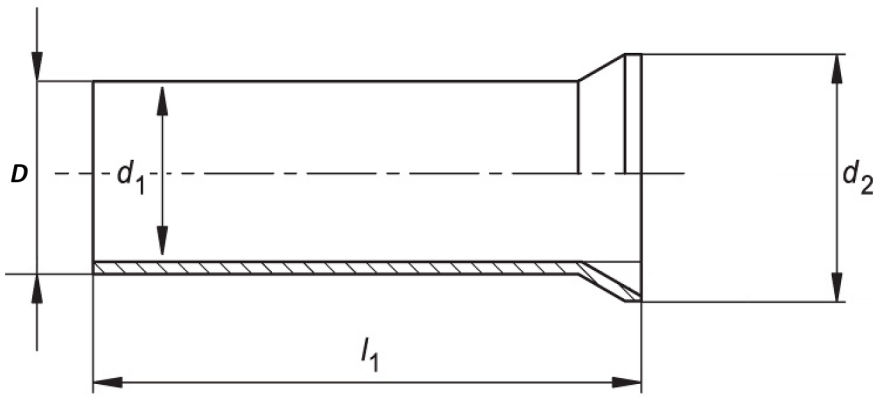

CATEGORY	Non Insulated Wire Ferrule	SCALE	4/1
PART #	N10012	SHEET	1-1
MATERIAL	Tin-Plated Copper	PAGE	

FerrulesDirect