Notes:

1. Maximum Electric Current: 95A
2. Maximum Electric Rating: 105°C 600 Volts Max
3. Insulation Material: Nylon
4. Insulation Color: Black
5. Terminal Material: Copper
6. Wire Range: True 4 AWG (21.2mm²)

Standard (Metric)

L1: 0.95 (24.0mm)
L2: 0.47 (12.0mm)
D: 0.25 (6.3mm)
D1: 0.23 (5.9mm)
D2: 0.44 (11.2mm)

Tolerances

(Unless Otherwise Specified)

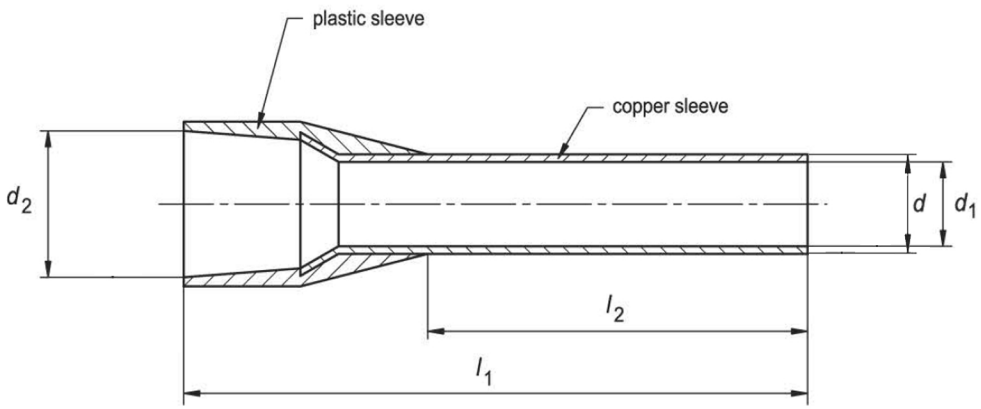

CATEGORY	Insulated Wire Ferrule	SCALE	4/1
PART #	AT212012	SHEET	1-1
MATERIAL	Tin-Plated Copper	PAGE	

FerrulesDirect